http://www.cergy-vis.fr
[CERGY-VIS]
ET SI ON PARLAIT SERVICE

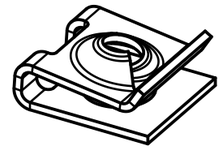

3D-Ansicht /
isometrical view
2:1

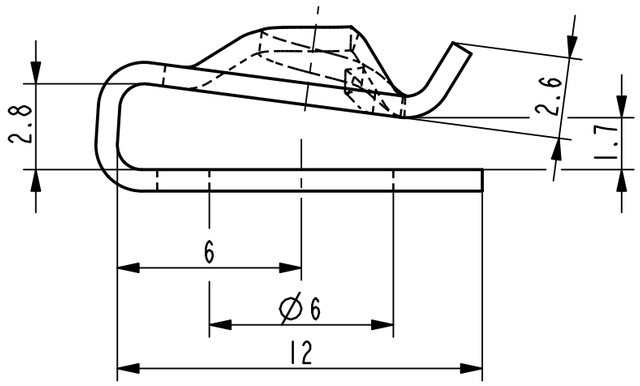

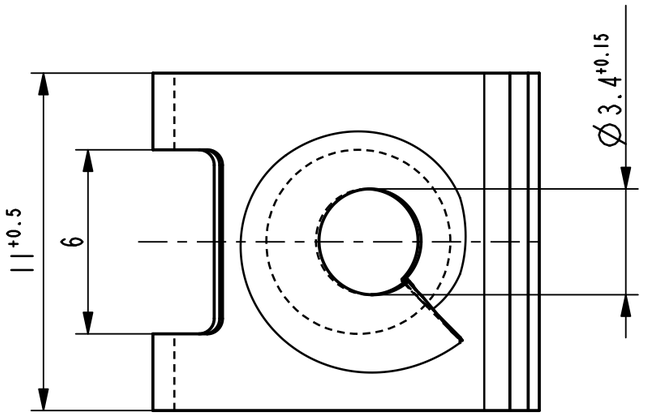

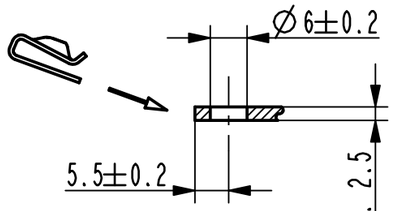

Einbausituation /
assembly situation
1:1

Vor Auslegung einer automatisierten Verarbeitung des Teils sollte Rueckspracche mit Fa. A.Raymond gehalten werden.
Fully automatic processing of the part requires prior consultation with A.Raymond GmbH.

Rev.	Anzahl/ quantity	Aenderungsbeschreibung / modification description	Datum/date	Name
-	-	-	-	-
-	-	-	-	-
-	-	-	-	-
-	-	-	-	-
-	-	-	-	-
-	-	-	-	-
-	-	-	-	-
-	-	-	-	-
-	-	-	-	-
Ac	-	Oberflaechenvariante entfernt (3000, 3300)	23.09.10	mj

A.Raymond GmbH & Co. KG
Teichstrasse 57
Germany - 79511 Loerrach
Phone +49 (0) 7621 174-0
Fax +49 (0) 7621 174-225

Bei Verstaendnisproblemen beantragen Sie bitte beim Absender die deutsche Fassung vor jeder Anwendung.
"CONDITIONS OF USE"
This drawing and all information (the "Drawing") disclosed are the exclusive property of A.Raymond.
By using this Drawing the Addressee acknowledge and accept that this Drawing
(1) is covered by A.Raymond' intellectual property rights or know-how and
(2) is provided under the following conditions who represent a Deposit Agreement.
This Drawing is for Adressee' internal use only limited to its estimation.
Without prior written consent of A.Raymond, no permission or rights for any purpose, is hereby granted, such as, without any limitation,
(1) the copy, in part or entirely
(2) and/or the presentation, in part or entirely, to any other third party outside the Addressee' company or in the company but with no interest
(3) and/or the distribution of the Drawing, in part or entirely, in any medium
(4) and/or the creation of any derivative work.
In case of breach of these conditions, Addressee shall indemnify A.Raymond from and against all damages (compensatory or consequential), costs, expenses and charges, caused or arising out of or attributable to its willful misconduct, fraud, negligence, infringement of A.Raymond' intellectual property rights. If the Addressee does not accept these conditions, please notify A.Raymond' sender immediately.

Schutzrechte/ patent rights: vorbehalten / all rights reserved

Rasch Code/ classification: AAAAD

Ersatz fuer/ substitue for: 011809_c_01/Ab/14.02.2008
Entw.Ref./ dev.ref.:
Projekt-Nr./ project no.:

Maszstab/ scale: 5:1
Format: A3
Allgemeintoleranz/ general tolerance: ±0.3 / ±5°
Datum/ date: 23.09.2010
Erstellt von/ prepared by: M. Junge
Freigegeben/ approved: 20100923073043
Projektion / projection
ALL DIMENSIONS ARE IN MILLIMETERS
Blechdicke/ mat. thickness DIN EN 10140: 0.70
Volumen/ volume (mm3): 164.0
Gewicht/ weight (g): 1.3

Oberfl./ finish: metallhaltige Korrosionsschutzbeschichtung, Farbe silber
metallic corrosion protection coated, colour silver
Oberfl. Code/ finish code: 5412

Werkstoffbehandl./ material treatment: zwischenstufenverguetet / austempered
375 ... 475 HV 5

Werkstoff/ material: C67S DIN EN 10132-4
Mat. code: 1000

Benennung/ title:

Blechmutter
fuer Gewinde EN ISO 1478-ST4.2

sheet metal nut
for thread EN ISO 1478-ST4.2

Teil-Nr./ part no.: 011809-0-03
Drawing type: Customer

Kundenteile-Nr. / customer part no.: -
Blatt / sheet: 1 / 1

CAD system & version: ProE WF3
Dateiname / filename: 011809-0C00

Teil-Nr. / part no.	Oberflaeche / Farbe / finish / colour	Oberfl. Code/ finish code
011809-0-07	phosphatiert / impraegniert phosphated / oiled	5100
011809-0-06	verzinkt / passiviert farblos zinc plated / passivated colourless	3250
011809-0-04	metallhaltige Korrosionsschutzbeschichtung, Farbe schwarz metallic corrosion protection coated, colour black	5451

Ausfuehrung / Execution